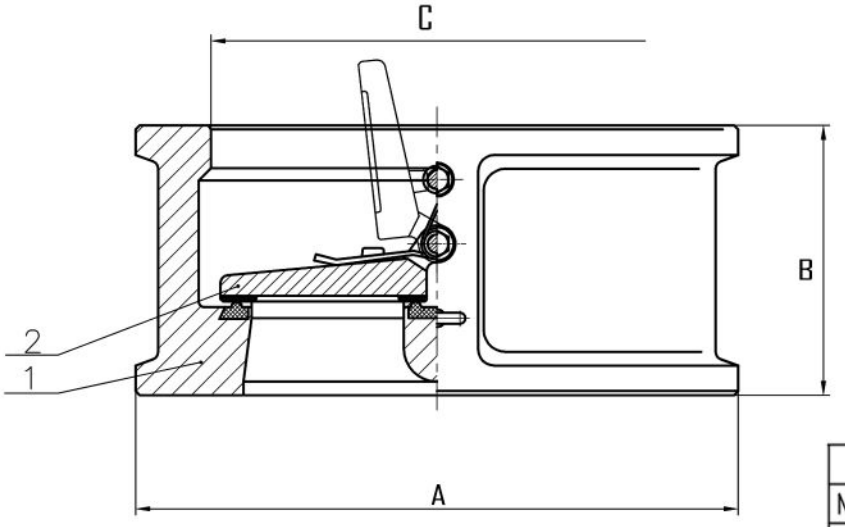

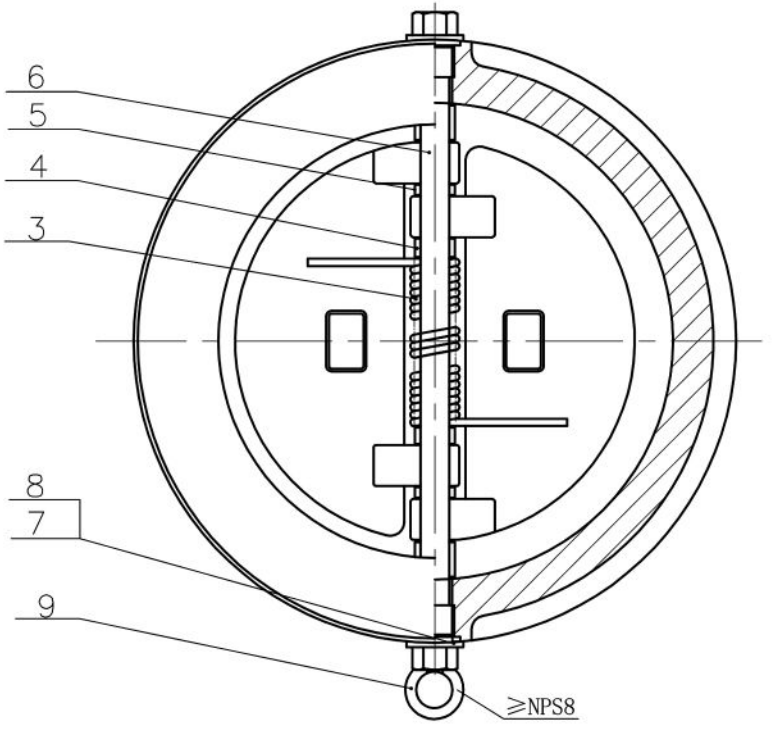

–VALVE ACCORDING TO API 594

–END TO END ACCORDING TO API 594

–FLANGED ACCORDING TO ASME B16.5

ITEM	SIZE	B	A	C
	50	54	101	60
	65	54	120	73
	80	57	133	89
	100	64	170	114
	125	70	196	141
	150	76	226	168
	200	95	288	219
	250	108	343	273
	300	143	403	324

Performance Standard			
Nominal Pressure		150Lb	
Test Pressure	Shell Test	3.0	MPa
	Seal Test	2.2	
	Air Test	0.6	
Suitable Temp.		≤150	℃
Suitable Medium:		W.O.G	

Performance Specifications			
Test Pressure	Nominal pressure PN16 Bar		
	Shell Test	2.4	MPa
	Back SealTest	1.76	
	Seat Test	1.76	
	Air Test	0.6	
Working Temp		−29~425 ℃	
Sutiable Media: Water, Gas, Oil etc			

Performance Specifications			
Test Pressure	Nominal pressure PN25 Bar		
	Shell Test	3.75	MPa
	Back SealTest	2.75	
	Seat Test	2.75	
	Air Test	0.6	
Working Temp		−29~425 ℃	
Sutiable Media: Water, Gas, Oil etc			

ITEM	NAME	MATERIAL	SPECIFICATION	NOTE
9	FLYING RINGS		ASTM A29 1025+Zn	
8	PLUG		ASTM A276 316	
7	GASKET		ASTM A276 316	
6	SHAFT		ASTM A276 316	
5	SPACER		ASTM A276 316	
4	SPRING PLATE		ASTM A276 316	
3	SPRING		INCONEL X750	
2	DISC		316	
1	BODY		316 +BUNA-N	

PROJECT:	----
REF:	----

ITEM:	----

MIDVALVES

	DATE	NAME
TRACED		
CHECKED		

WAFER CHECK VALVE
CLASS 150LB(RF)
PN 16 / PN 25

REV.	DATE	DRAWN	CHECKED

SCALE	DRAWING No :	REV:
---		0